CrossTalk: Market Research into SOA State of the Art

Dr. Aaron Dew,
Sr. Systems Engineer
DoD Business
Transformation Agency

April 21, 2010

Current State and Future Vision: Its Happening Now

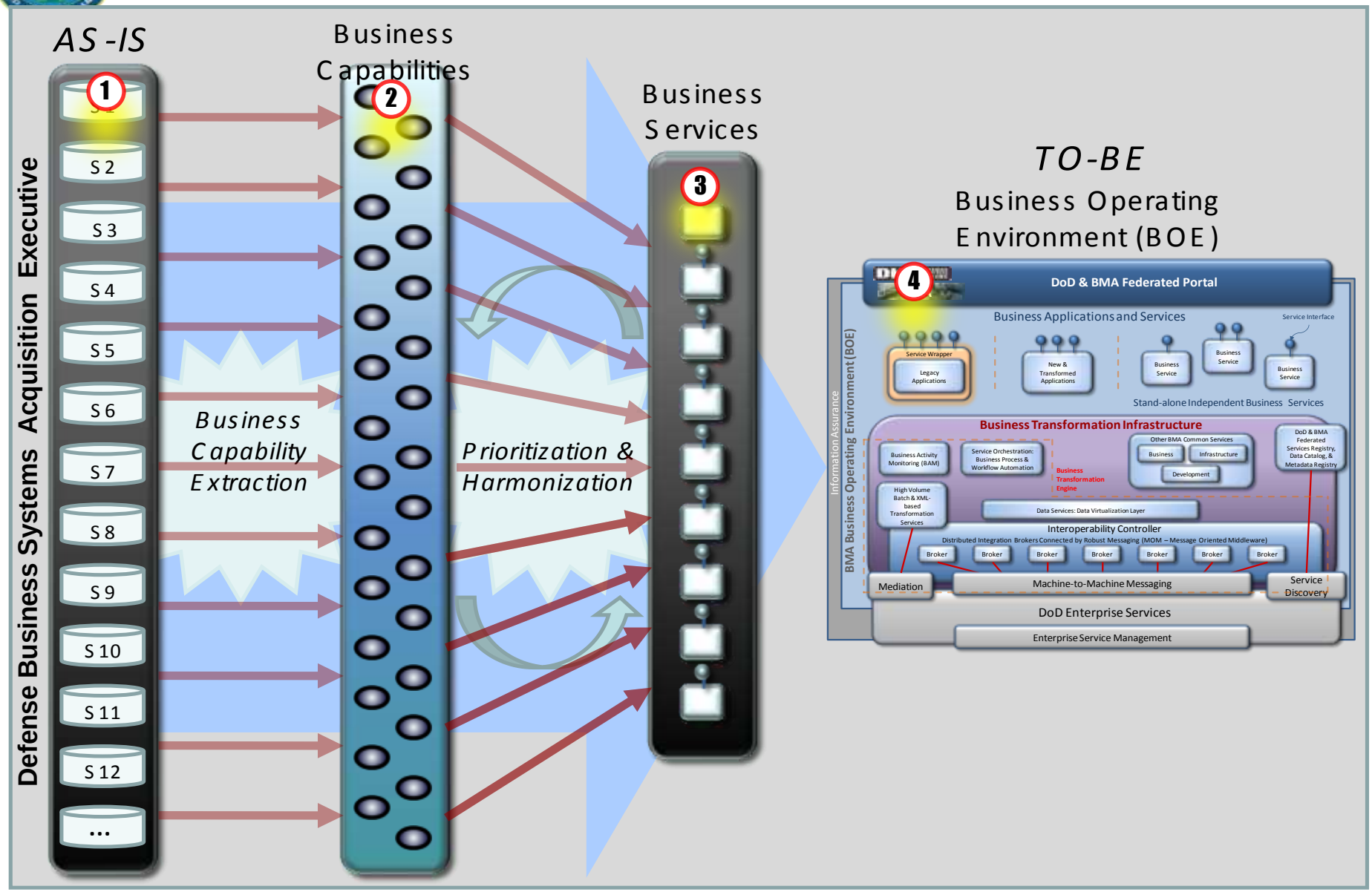

Business Transformation Infrastructure

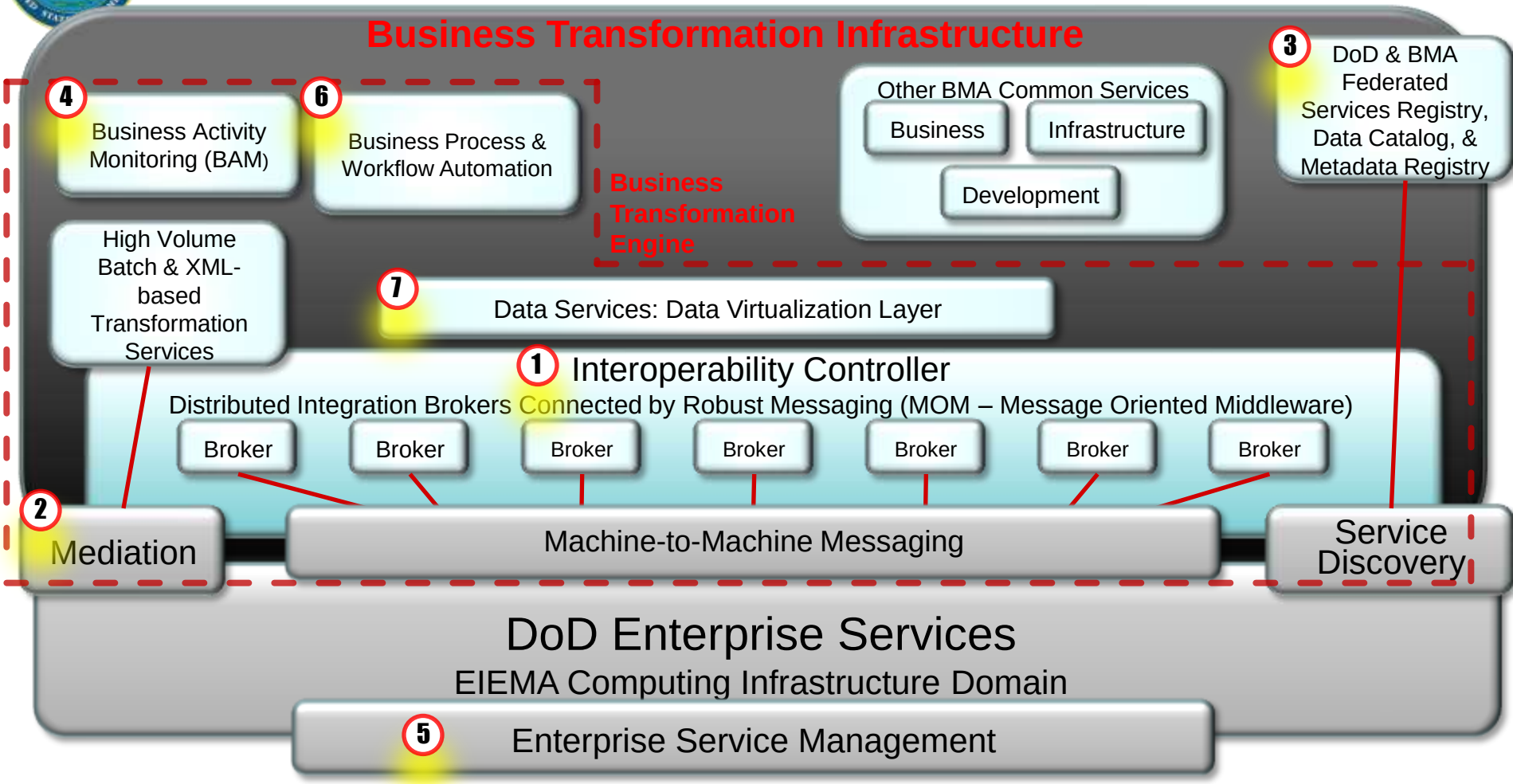

1. Interoperability Controller
2. Mediation – Standard & High Volume
3. Service Discovery, Data Catalog & MDR
4. Business Activity Monitoring
5. Enterprise Services Management
6. Business Process & Workflow Automation
7. Data Virtualization & Data Services

BTI & BOE Patterns

BTI Components:

1. Interoperability Controller
2. Mediation
3. Service Discovery
   - 3a. Service Registry
   - 3b. Metadata Registry
   - 3c. Enterprise Catalog
4. Business Activity Monitoring
5. Enterprise Services Management
6. Business Process and Workflow Automation
7. Data Virtualization and Data Services

BOE Components:

8. Information Assurance
9. Governance

1. Interoperability Controller

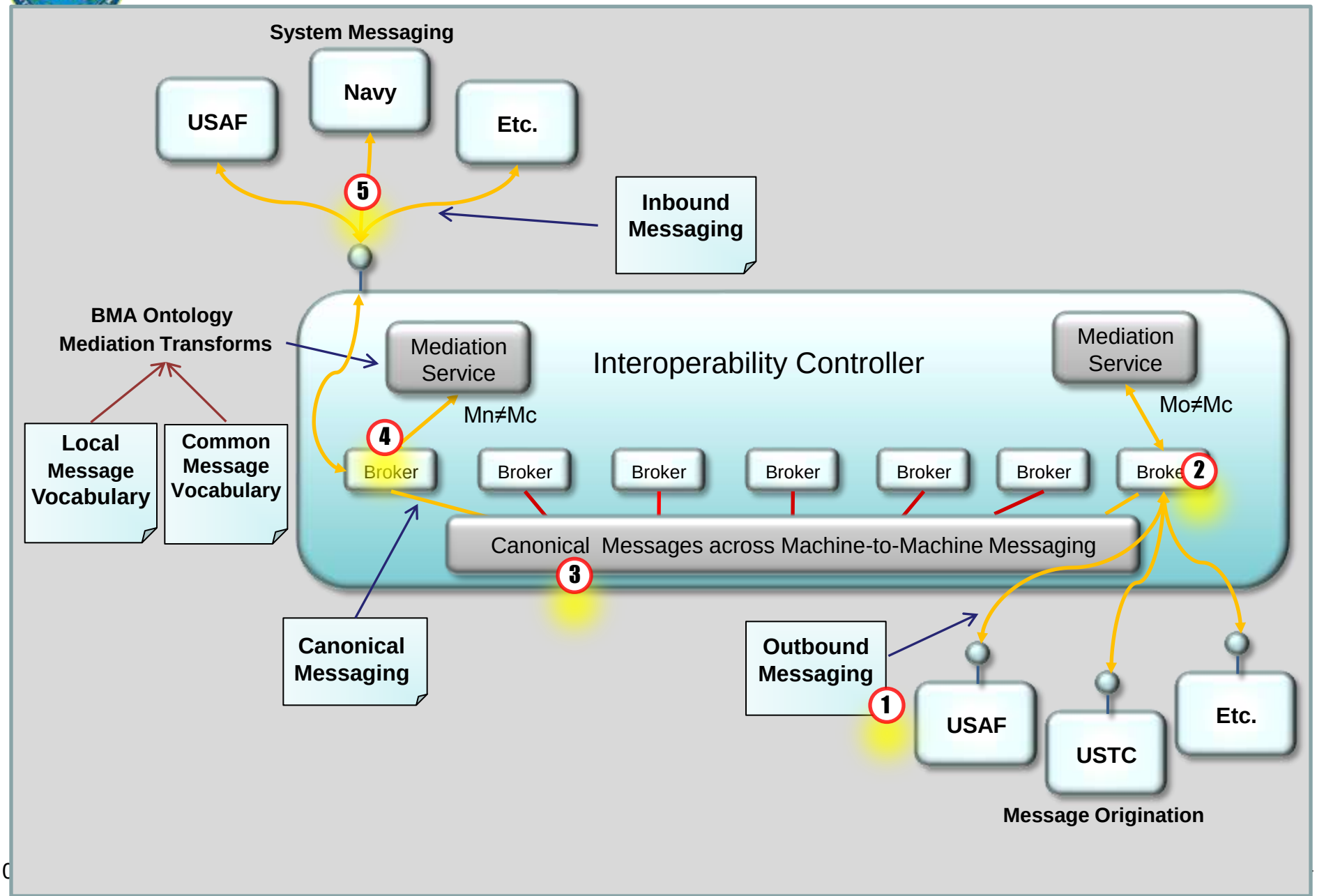

2. Mediation

BTI Canonical Message Model and Mediator

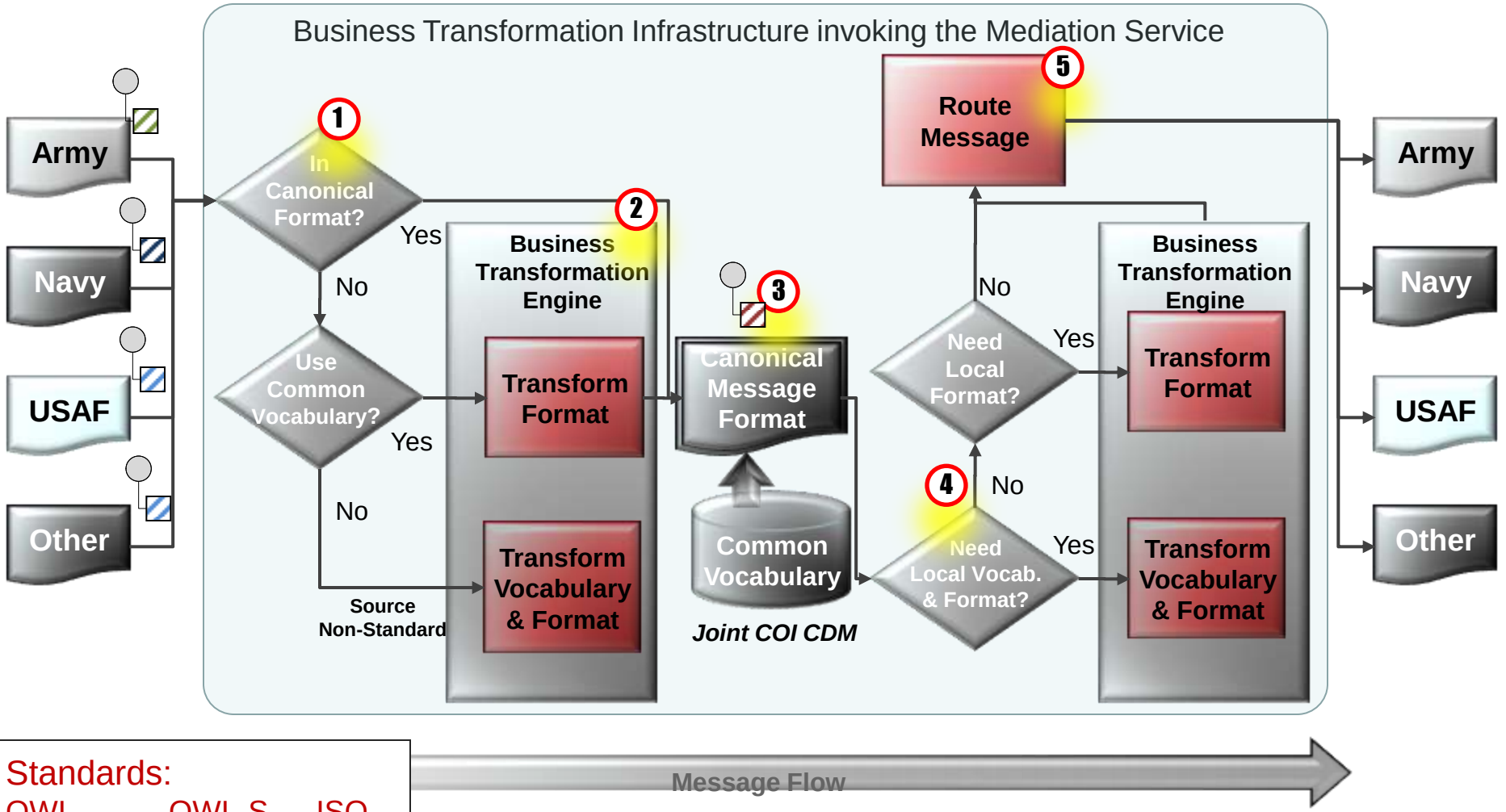

Standards:

OWL	OWL-S	ISO
11179	ebXML	RDF
XSLT		

3. Service Discovery

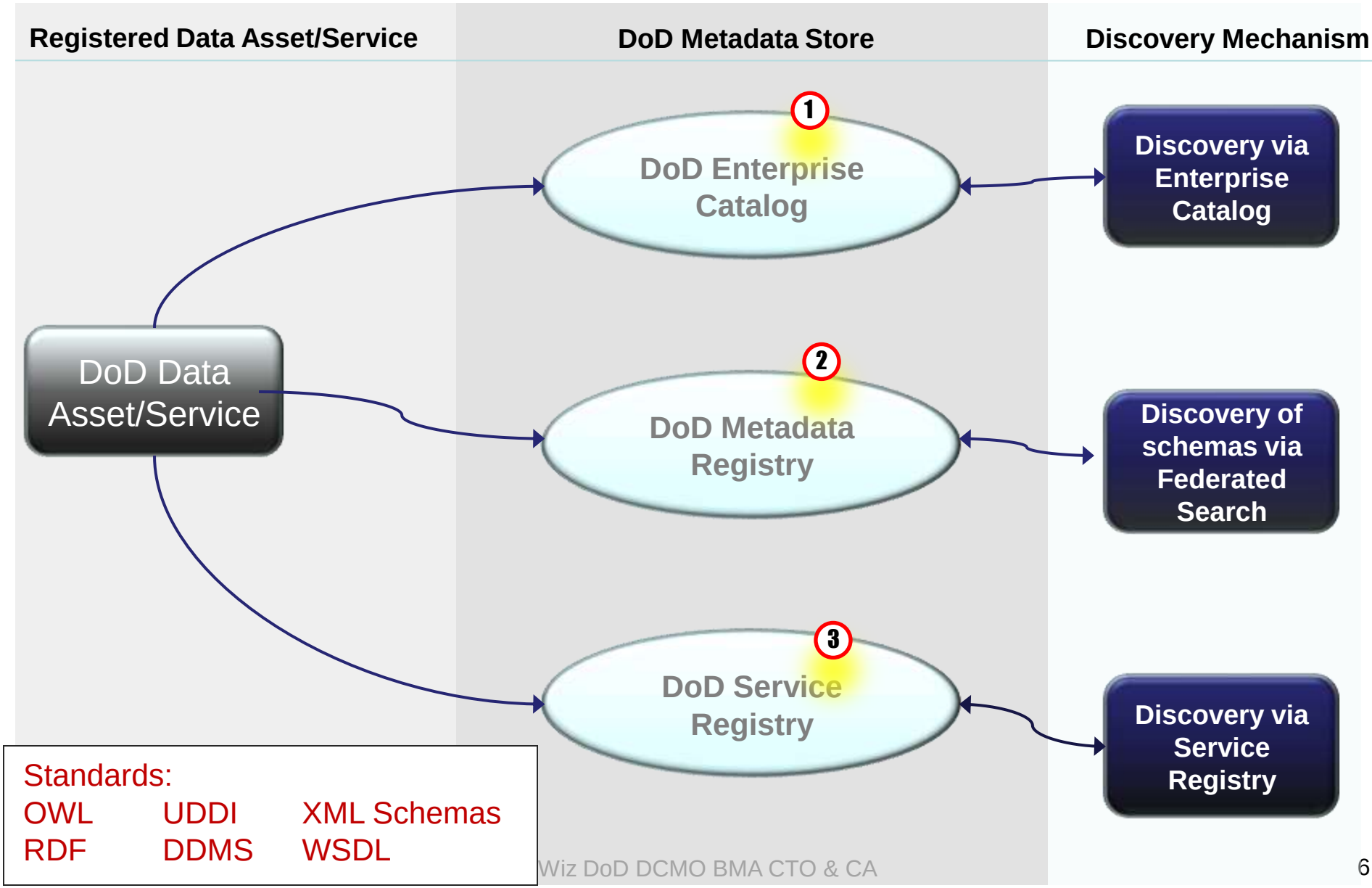

Standards:

OWL	UDDI	XML Schemas
RDF	DDMS	WSDL

4. Business Activity Monitoring

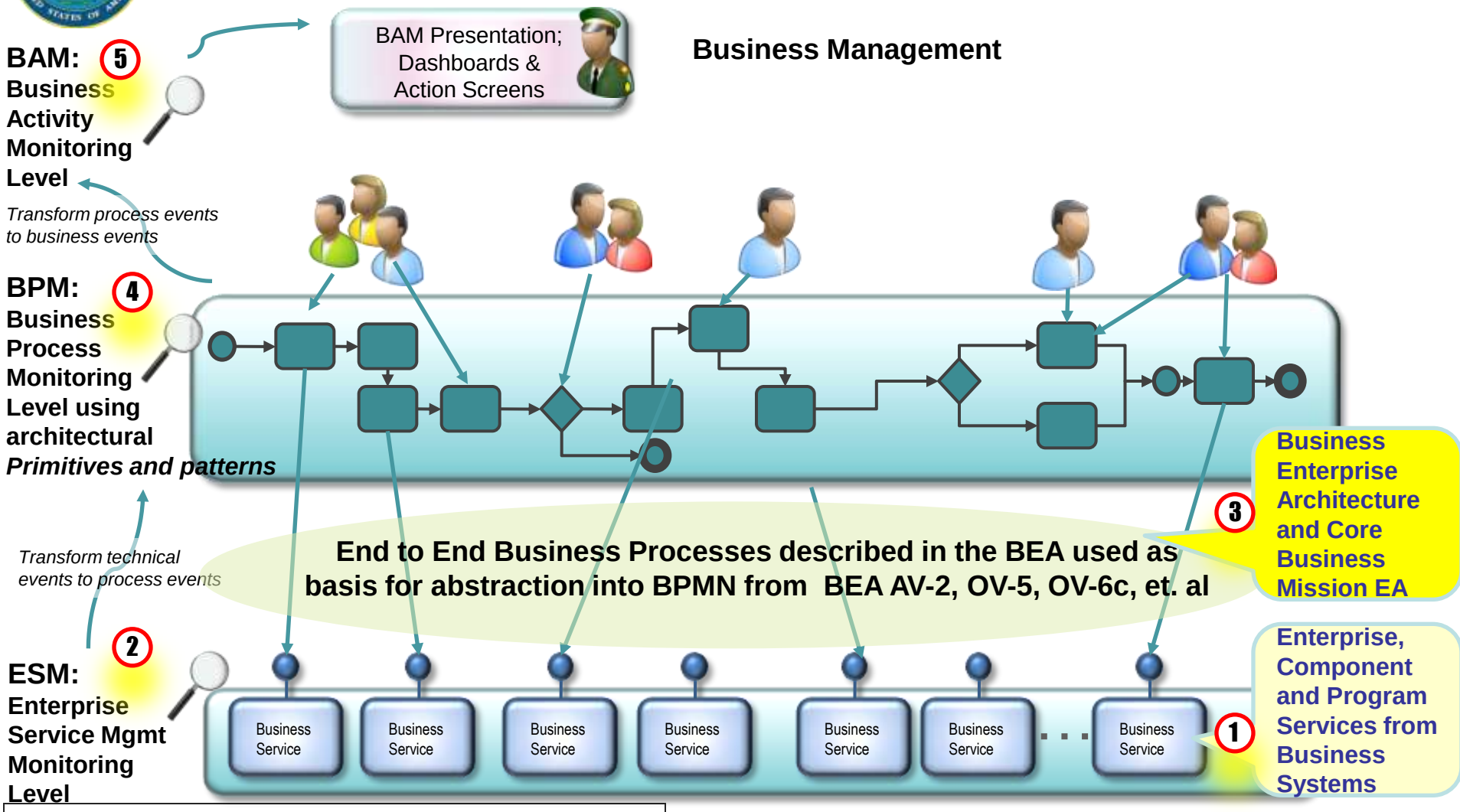

Standards:
Business Process Modeling Notation (BPMN)
Business Process Execution Language (BPEL)
XML Process Definition Language (XPDL)

5. Enterprise Service Management

Human
Service Manager

Dashboards provide overall views of the health and operation of the services in the BOE.

ESM
Presentation; Dashboards & Action Screens

Automated ESM Facilities

Human Manager Response 4

Automated Response 3

3

2 **Alerts & Notifications**

1 ***ESM Agents***

Service 2

Service 2

Service 3

Service *n*

Enterprise, Component or Program Services running in the BOE

6. Business Process and Workflow Automation

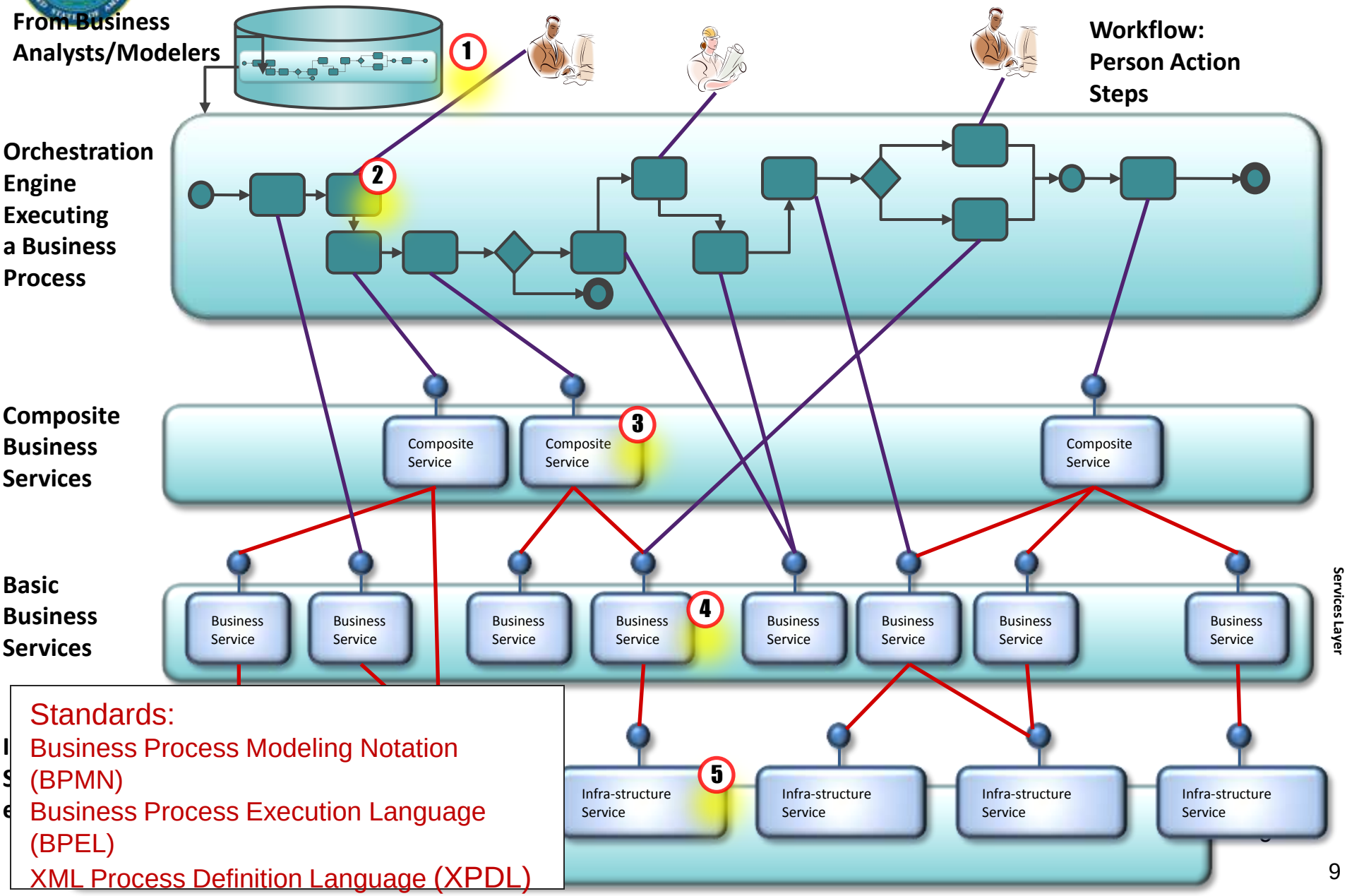

Standards:

Business Process Modeling Notation (BPMN)

Business Process Execution Language (BPEL)

XML Process Definition Language (XPDL)

7. Data Virtualization and Data Services

Provide a data [illegible] and a [illegible] of the authoritative source in alignment with metadata and the BEA.

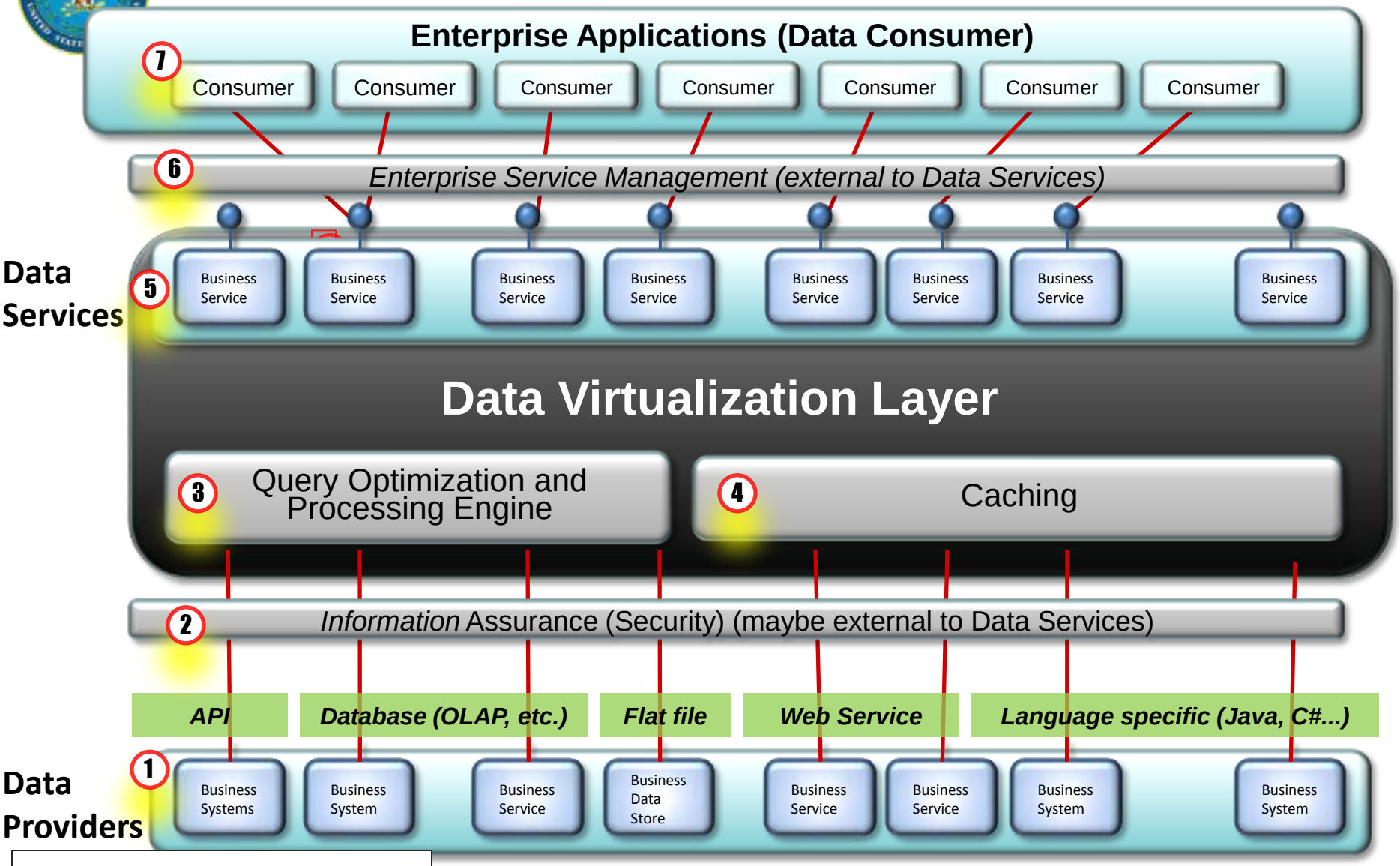

Standards:
SOAP OWL WSDL
ODBC JDBC

8. Security

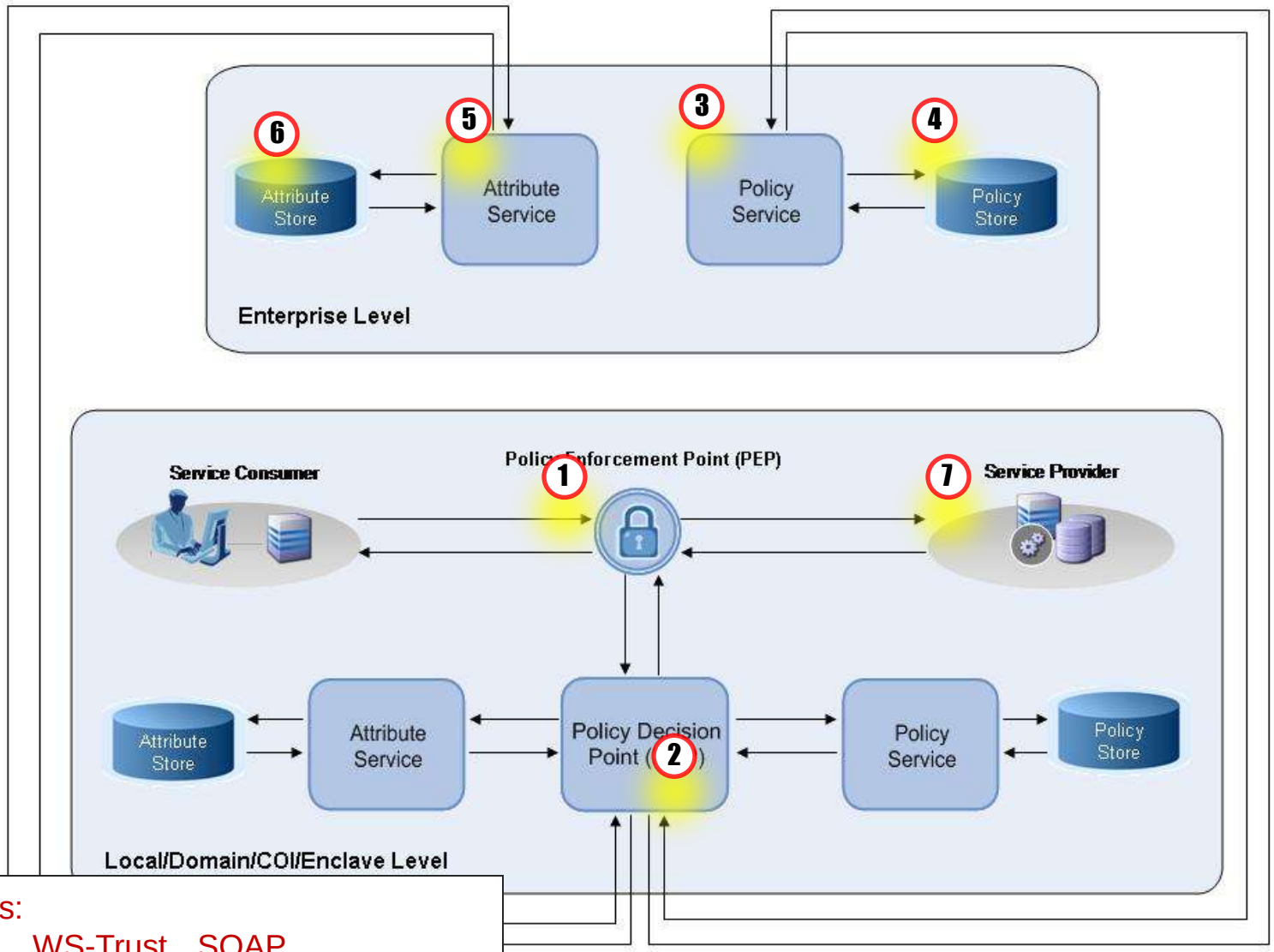

Standards:
WS-* WS-Trust SOAP
SAML eXtensible
Access Control Markup Language (XACML)

FROM DoD Security Reference Architecture v1.0

9. Governance

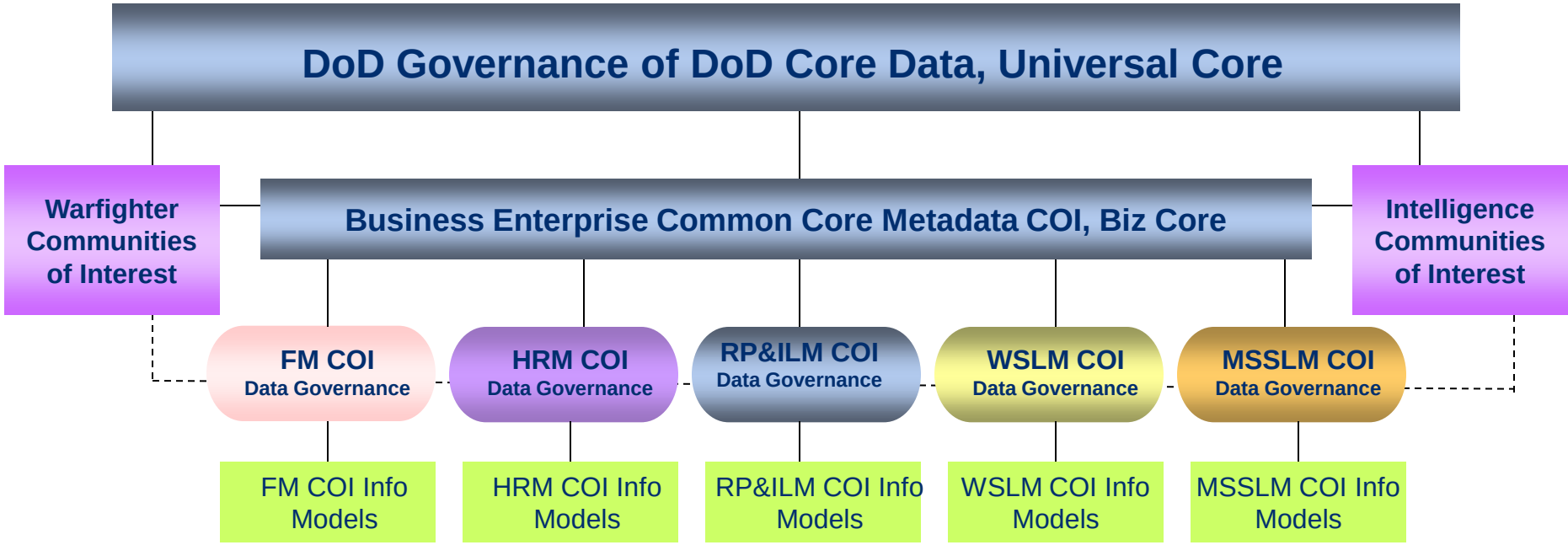

BTA Approach

BTA SOA Design Pattern

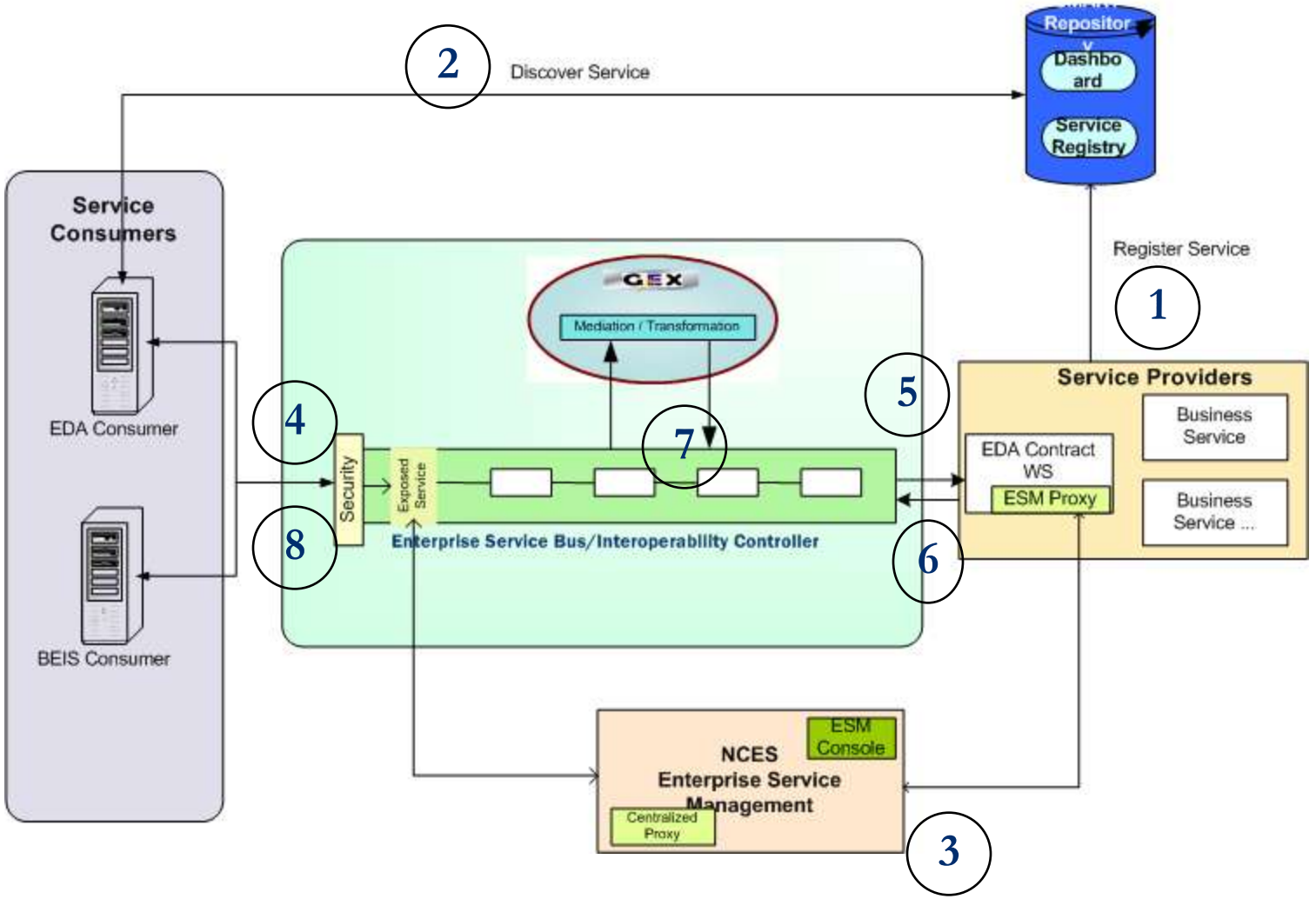

Questions?